USB-UART Bridge

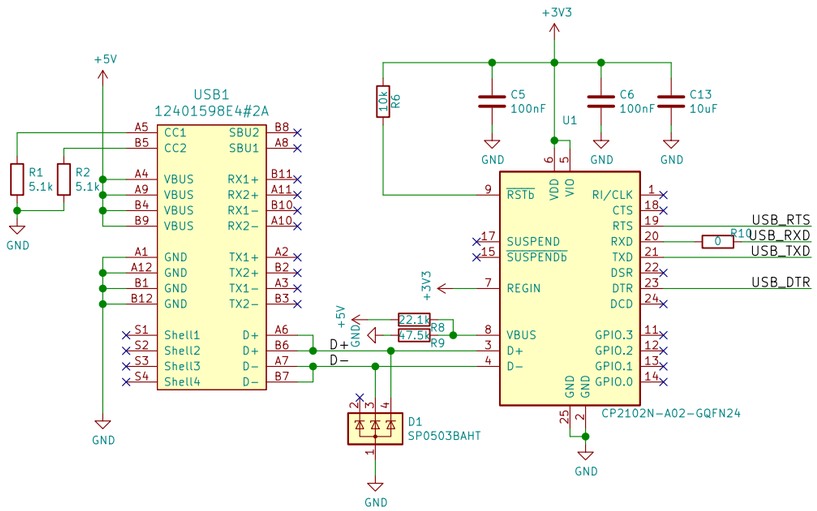

Voltage Regulator

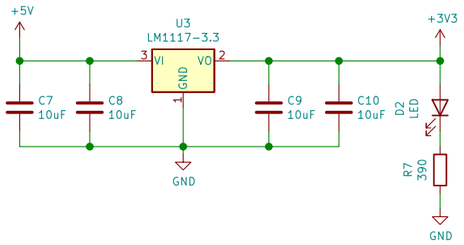

LCD Connector

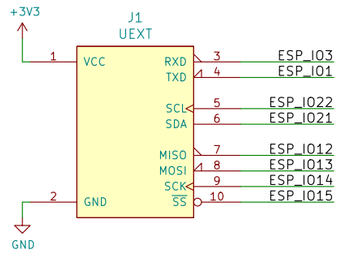

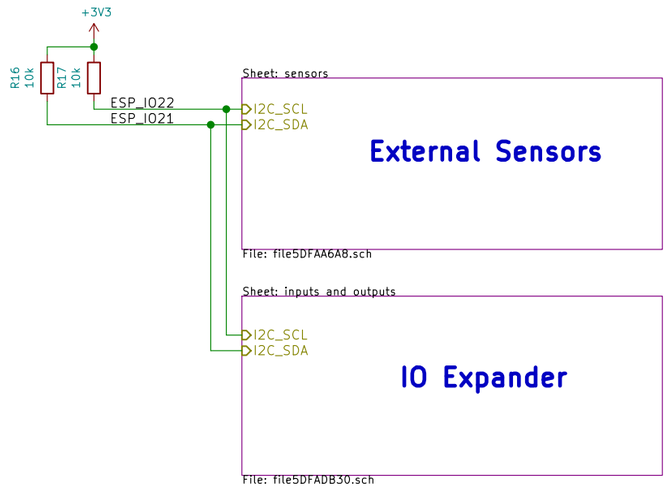

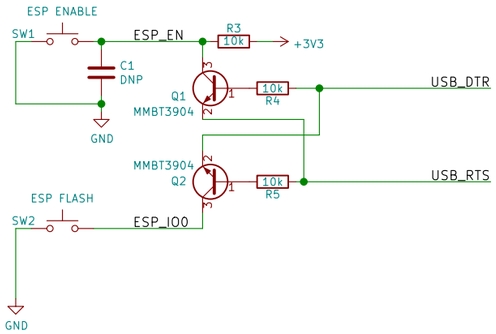

ESP32 Controller Module

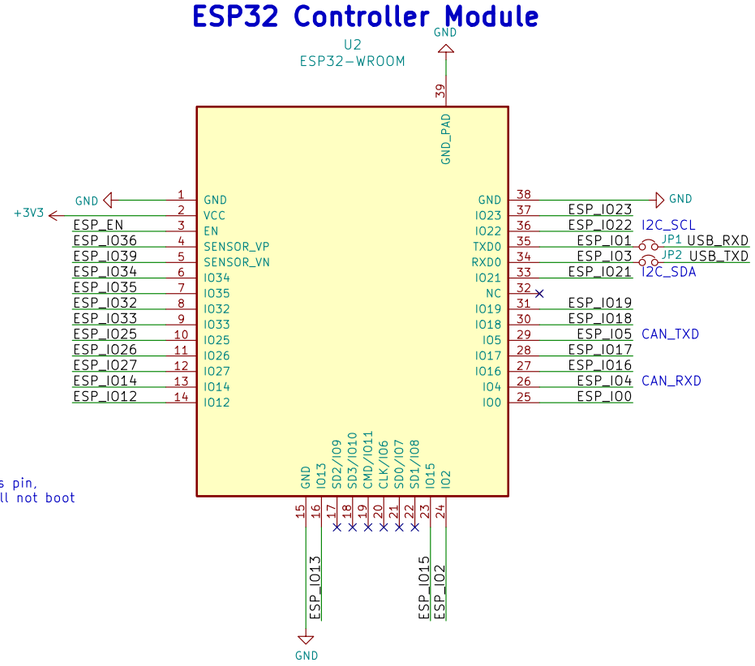

Arduino Sheild Conn.

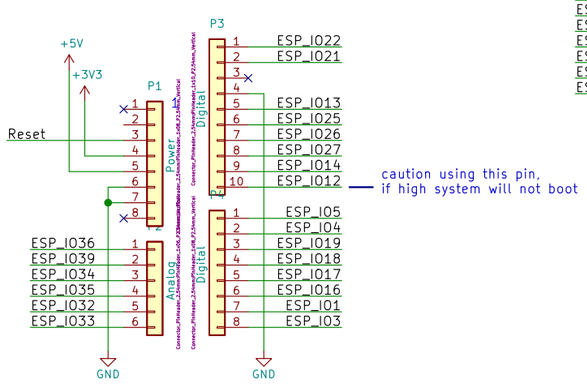

ESP32 PINOUT

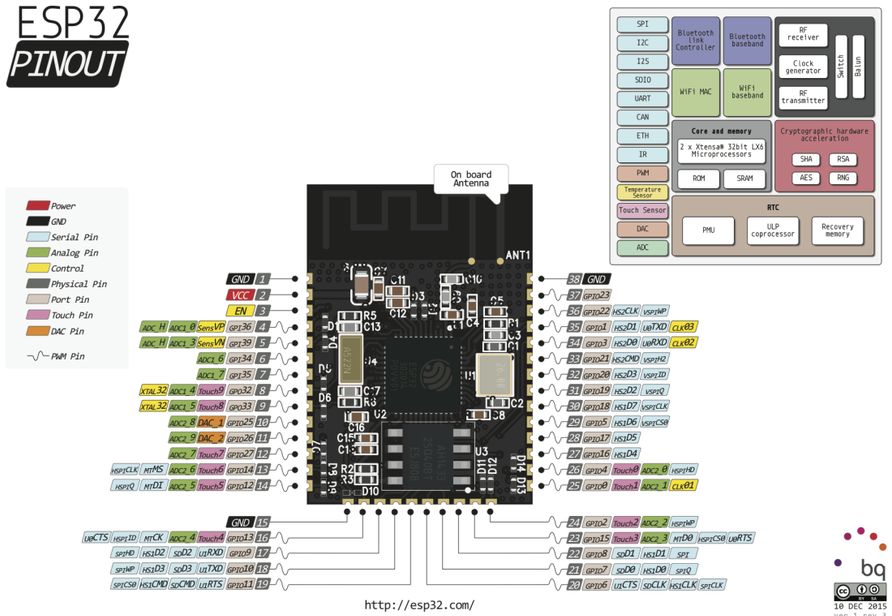

10 DEC 2015
ver 1 rev 3

Author: Reiner Schmidt

GoRobo

Sheet: /
File: is-trainer-base.sch

Title: GoRobo IoT Trainer Board

Size: A3	Date: 2021-03-09	Rev: V1.0
KiCad E.D.A. kicad (5.1.6)-1		Id: 1/3

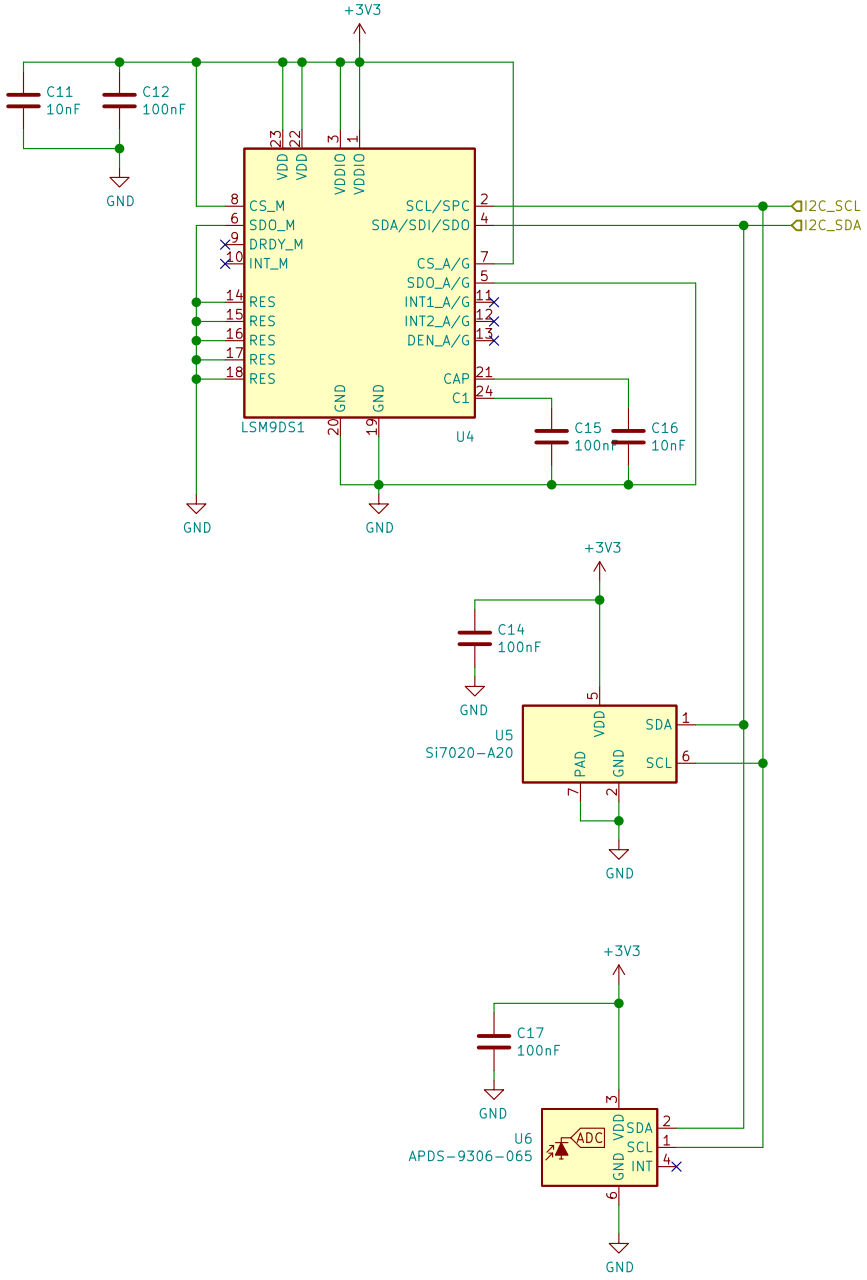

9-Axis IMU

Temperature & Hummidity

Light Sensor

Sheet: /sensors/
File: file5DFAA6A8.sch

Title:

Size: A4	Date:	**Rev:**
KiCad E.D.A. kicad (5.1.6)-1		Id: 2/3

Input Output

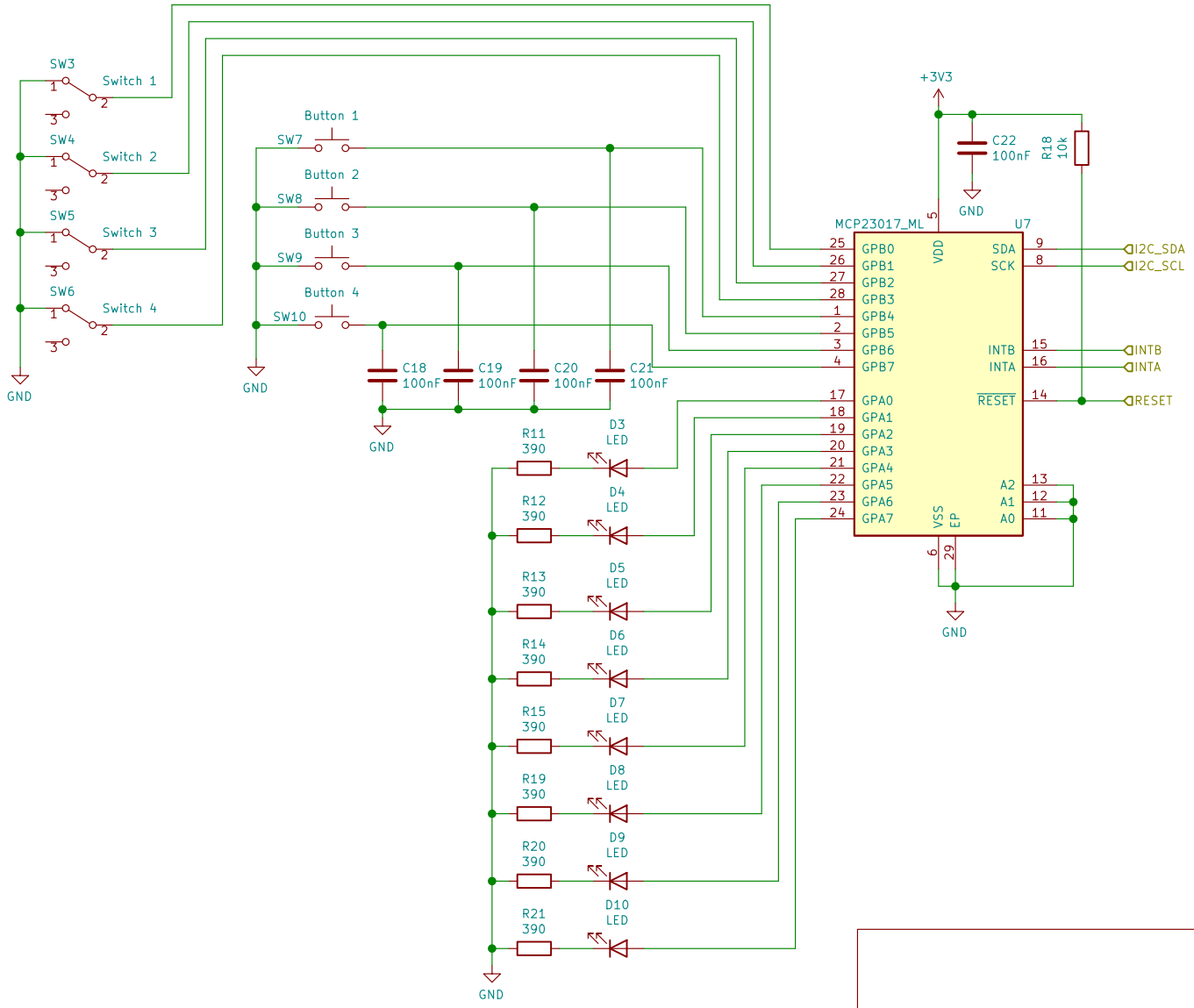

Sheet: /inputs and outputs/
File: file5DFADB30.sch

Title:

Size: A4	Date:	Rev:
KiCad E.D.A. kicad (5.1.6)-1		Id: 3/3